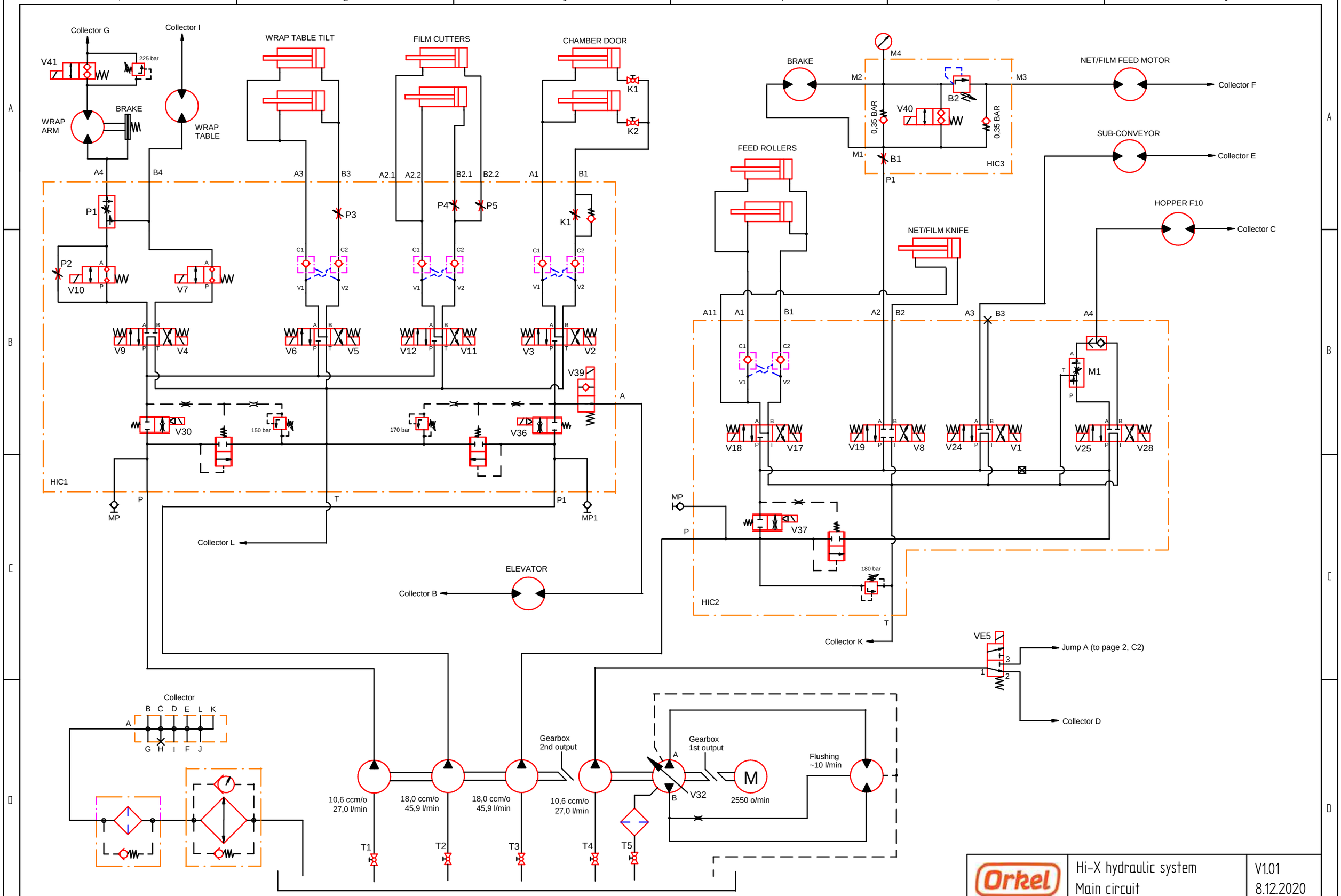
Collector G
Collector I
V41
225 bar
WRAP ARM
BRAKE
WRAP TABLE
WRAP TABLE TILT
FILM CUTTERS
CHAMBER DOOR
K1
K2
A4
B4
A3
B3
A2.1
A2.2
B2.1
B2.2
A1
B1
P1
P2
P3
P4
P5
V10
V7
V9
V4
V6
V5
V12
V11
V3
V2
V39
V30
150 bar
170 bar
V36
HIC1
MP
MP1
Collector L
ELEVATOR
Collector B
BRAKE
M4
M2
M3
NET/FILM FEED MOTOR
Collector F
B2
V40
0,35 BAR
M1
B1
HIC3
SUB-CONVEYOR
Collector E
FEED ROLLERS
HOPPER F10
Collector C
NET/FILM KNIFE
A11
A2
B2
A3
B3
V18
V17
V19
V8
V24
V1
V25
V28
V37
180 bar
HIC2
Collector K
VE5
Jump A (to page 2, C2)
Collector D
Collector
B C D E L K
G H I F J
10,6 ccm/o
27,0 l/min
18,0 ccm/o
45,9 l/min
Gearbox
2nd output
Gearbox
1st output
V32
2550 o/min
Flushing
~10 l/min
T1
T2
T3
T4
T5
Orkel
Hi-X hydraulic system
Main circuit
V1.01
8.12.2020

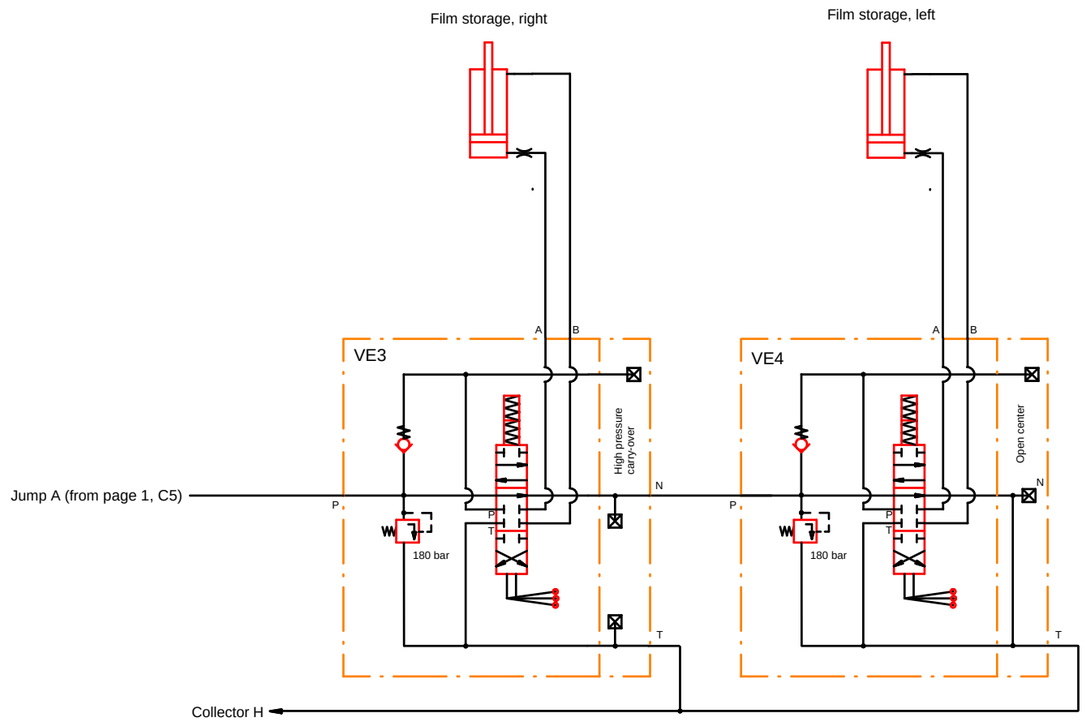

Orkel

Hi-X hydraulic system
Film storage circuit

V1.01
8.12.2020

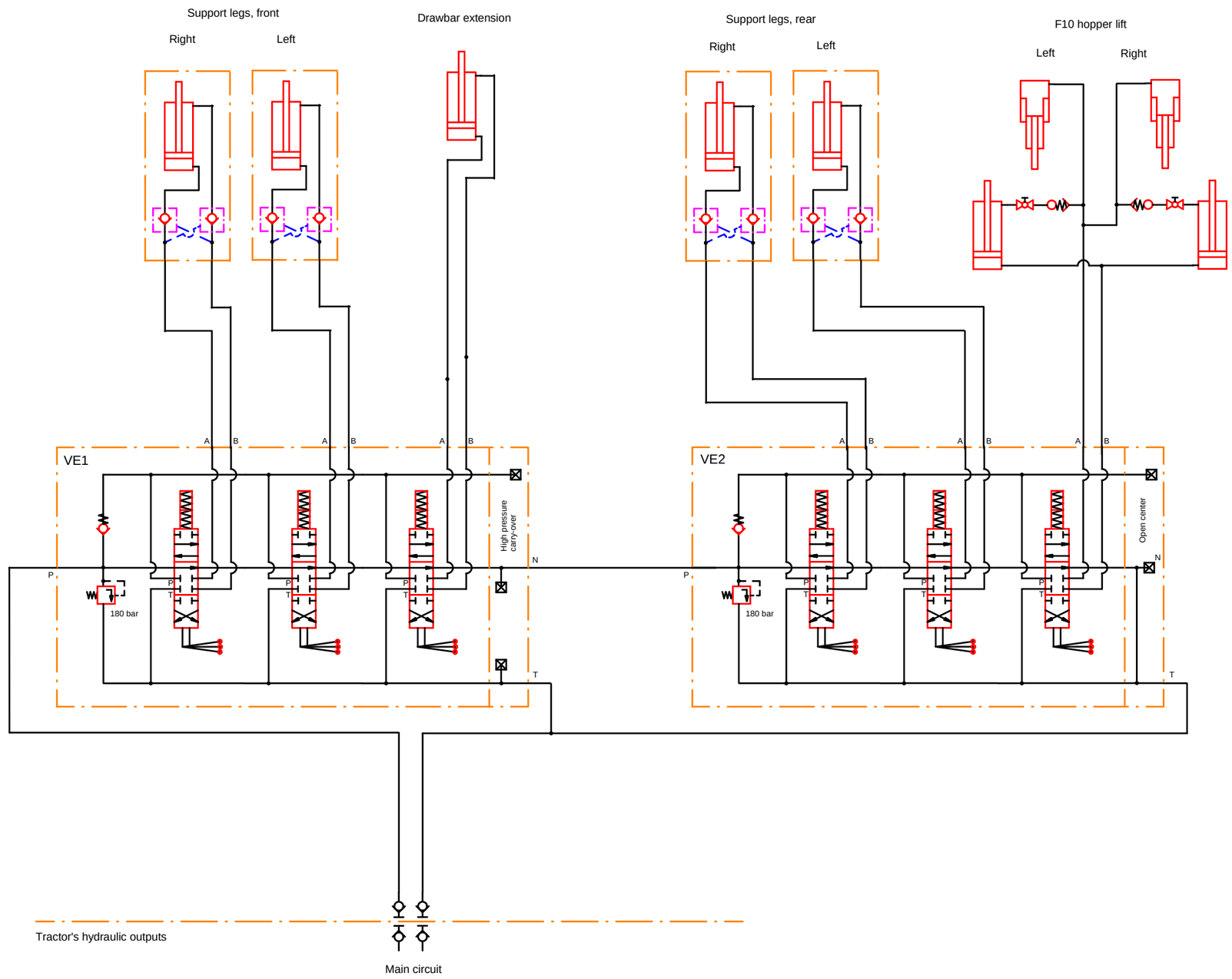

Orkel	Hi-X hydraulic system External circuit	V1.01 8.12.2020